COOLING TOWER

BKC-SERIES ROUND TYPE

http://www.bkkcooling.co.th

STRUCTURAL PROJECT

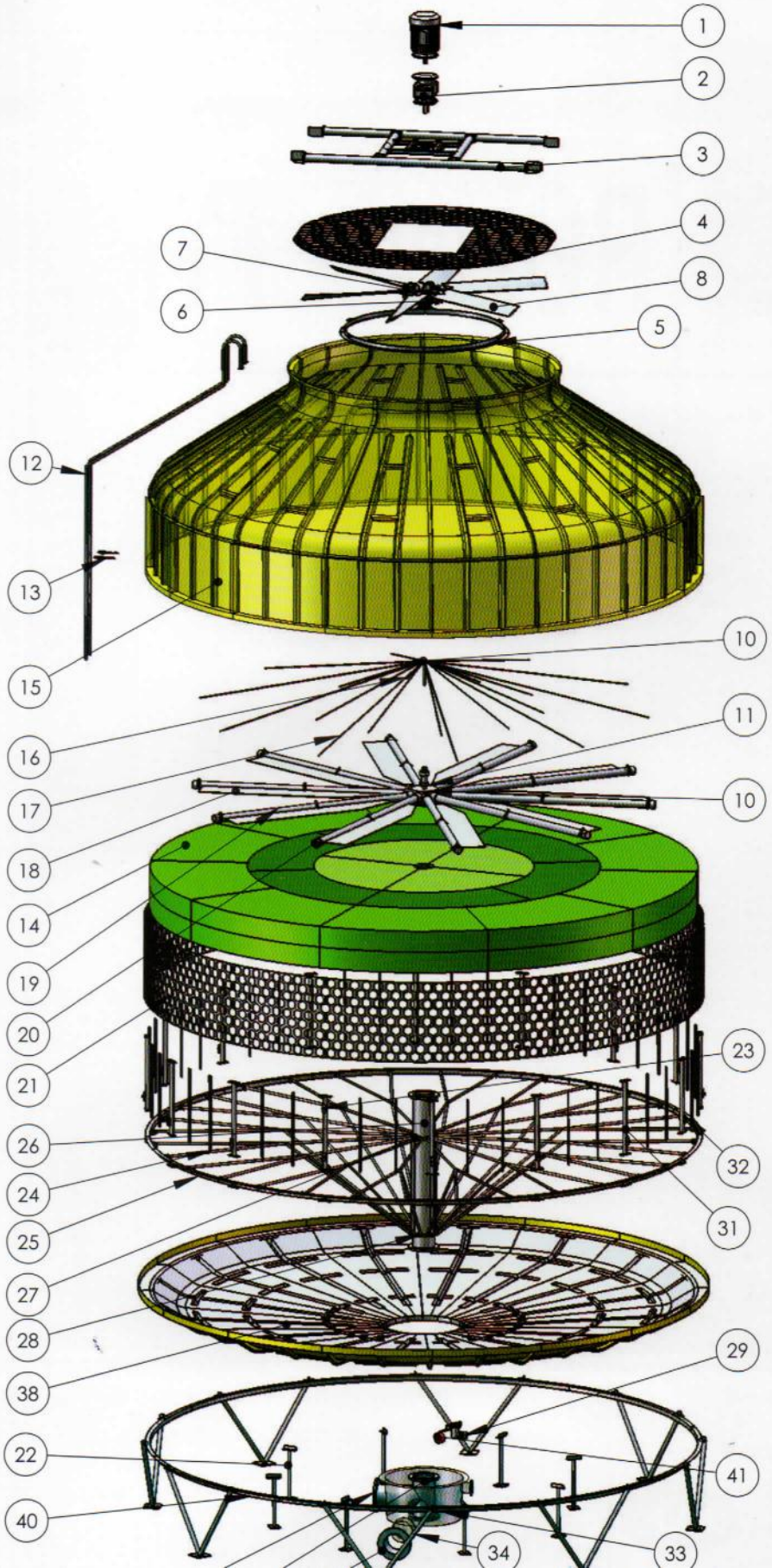

Part NO.	DISCRIPTION	QTY	REMARK
41	FLOAT VALVE	1	STD.
40	BASIN SUPPORT RING	8	DWG.NO BKC-100-02
39	BASIN SUPPORT(V)	8	DWG.NO BKC-100-02
38	BASIN FRP	16	DWG.NO BKC-100-04
37	INLET PIPE	1	DWG.NO BKC-100-05
36	OUTLET PIPE	1	DWG.NO BKC-100-05
35	TEE PVC	1	DWG.NO BKC-100-05
34	SUCTION STAINER	1	STD.
33	SUCTION TANK FRP	1	DWG.NO BKC-100-04
32	AIR MESH SUPPORT	32	STD
31	POST	16	DWG.NO BKC-100-06
30	FILLER SUPPORT (GRATE)-Notshow	1	DWG.NO BKC-100--06
29	FLOAT VALVE	1	STD.
28	CLUMP COLUME	1	STD.
27	CLAMP COLUMN	1	STD
26	STAND PIPE	1	DWG.NO BKC-100-05
25	FILLER SUPPORT RING	8	DWG.NO BKC-100-03
24	FILLER SUPPORT	16	DWG.NO BKC-100-03
23	PVC BOLT	64	STD.
22	BASIN SUPPORT	8	DWG.NO BKC-100-02
21	AIRINLET MESH	1	STD.
20	TUBE CAP	10	STD.
19	DISTRIBUTION TUBE	10	STD.
18	ELIMINATOR	10	STD.
17	TENSION WIRE	10	STD.
16	TURN BUCKLE	10	STD.
15	CHSING FRP.	16	DWG.NO BKC-100-04
14	FILLER	1	DWG.NO BKC-100-07
13	T-BRACKRT	2	DWG.NO BKC-100-06
12	LADDER	1	DWG.NO BKC-100-06
11	SPRINKLER HEAD	1	STD.
10	HANGER	1	STD.
9	LOCK NUT	1	STD.
8	FAN BLADE	4	STD.
7	U-BOLT	8	STD.
6	FAN HUB	1	STD.
5	MOTOR SUPPORT RING	1	DWG.NO BKC-100-01
4	FAN GUARD	8	DWG.NO BKC-100-05
3	MOTOR SUPPORT	1	DWG.NO BKC-100-01
2	GEAR REDUCER	1	STD.
1	MOTOR	1	STD.

GENERAL DESCRIPTION AND FEATURES

DESIGN FEATURES :

The all-Fiberglass Reinforced Polyester casing is circular shaped thus eliminating special positioning requirements and is not affected by prevailing wind directions. It further permits quick and easy installation due to light-weight and compactness. Site assembly is simplified by the modular desigh of components.

GENERAL DESCRIPTION :

Casing	B.K.K. Model BKC of Fiberglass Reinforced Polyester cooling towers have been designed for durability
Fan Blade	Aero - dynamically designed propeller fans at low speed are used to save on power consumption and to assure quiet operation. Fan blade is aluminium alloy fans
Water Distribution	A highly efficient rotating sprinkler head system in use the aluminium alloy sprinkler system is incorporated. Both sprinkler systems are self-rotating at low head loss.
Eliminators	Eliminators are of special F.R.P. design to reduce carryover to the barest minimum.
Filling	The filling is made of P.V.C. sheet laid in a ring form to enable easy replacement, having a high heat transfer efficiency. It is suitable for operation with inlet water temperature up to 55 C. or 130 F.
Inlet Louver	P.V.C. plastic mesh to prevent objects entering the water basin.
Ladder	Accessibility for maintenance to operating fan unit etc.

MATERIAL SPECIFICATION

MODEL BKC	10	15	20	25	30	40	50	60	70	80	100	125	150	175	200	225	250	300	350	400	500	600	700	800	1000	1500
MOTOR	220/380 V. , 3Ph. 50/60 Hz (others available)																									
FAN DRIVE	DIRECT DRIVE																			GEAR SPEED REDUCER DRIVE OR BELT DRIVE						
FAN BLADE	SUS					ALUMINIUM ALLOY																				
CASING	GLASS FIBRE REINFORCED PLASTIC																									
SPRINKLER HEAD	GLASS ALUMINIUM ALLOY WITH STAINLESS STEEL SHAFT																									
ELIMINATOR	NONE										GLASS FIBRE REINFORCED PLASTIC															
FILLER	PVC																									
AIR INLET MESH	PVC																									
LADDER	NONE										HDGS															
MOTOR SUPPORT	HDGS																									
CASING SUPPORT	GLASS FIBRE REINFORCED PLASTIC																			HDGS						
BASIN SUPPORT	GLASS FIBRE REINFORCED PLASTIC																			HDGS						
STRAINER	STAINLESS STEEL MESH OR PVC MESH																									
WATER BASIN	GLASS FIBRE REINFORCED PLASTIC																									

DIMENSION TABLE & PIPE CONNECTION BKC-10~1500 RT

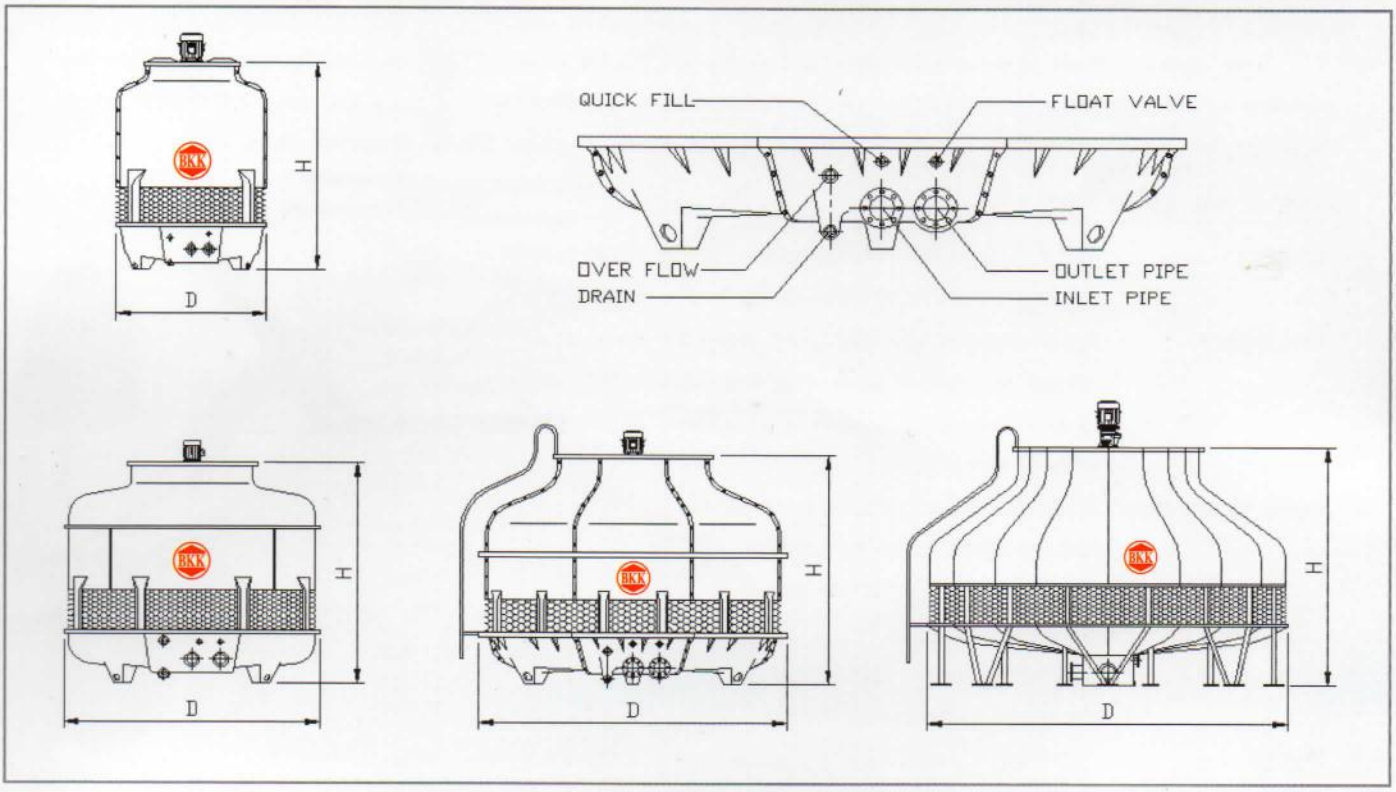

Model BKC	DIMENSION (mm.)		PIPE CONNECTION (mm.)						FAN MOTOR H.P.	FAN DIMENSION Ø mm.	AIR VOLUME m3/min.	NORMAL WATER FLOW l/min.	WEIGHT:Kg.	
	H	D	IN	OUT	OVER FLOW	DRAIN	FLOAT VALVE	QUICK FILL					DRY	OPR.
10	1570	930	40	40	25	25	15	-	1/4	500	85	130	50	167
15	1580	1220	50	50	25	25	15	-	1/2	605	140	195	65	284
20	1760	1220	50	50	25	25	15	-	1/2	605	140	260	74	297
25	1760	1220	65	65	25	25	15	-	1/2	605	185	325	95	320
30	1720	1650	65	65	25	25	15	-	3/4	860	225	390	110	500
40	1860	1760	80	80	25	32	20	-	1	960	280	520	165	580
50	1910	1980	80	80	25	32	20	-	1	960	330	650	205	630
60	1910	1980	80	80	25	32	20	-	1.5	960	420	780	225	650
70	2000	2160	100	100	25	32	20	-	1.5	1160	510	910	285	680
80	2000	2160	100	100	25	32	20	-	1.5	1160	550	1040	305	700
100	2100	2660	125	125	40	32	25	25	2	1500	700	1300	425	1110
125	2100	2660	125	125	40	32	25	25	2	1500	830	1675	480	1300
150	2450	3420	150	150	40	50	25	32	3	1700	950	1950	650	1800
175	2450	3420	150	150	40	50	25	32	5	1700	1150	2275	680	2300
200	2900	3940	150	150	40	50	25	32	5	2100	1250	2600	780	2900
225	2900	3940	200	200	80	50	25	32	7.5	2100	1750	2925	800	3200
250	2900	3940	200	200	80	50	25	32	7.5	2100	1850	3250	850	3500
300	3750	4640	200	200	80	50	32	32	10	2400	2200	3900	1500	4400
350	3750	4640	200	200	80	50	32	32	10	2400	2300	4550	1600	4500
400	4595	5200	250	250	80	50	50	50	15	3100	2600	5200	2200	6700
500	4595	5200	250	250	80	50	50	50	15	3100	2750	6500	2450	7000
600	4595	5500	250	250	100	50	50	50	20	3100	3750	7800	3150	9300
700	4975	6520	250	250	100	50	50	50	20	3400	4050	9100	3800	10650
800	5150	8020	300	300	100	80	80	80	25	3600	5000	10400	4500	12000
1000	5150	8020	300	300	100	80	80	80	30	3600	5500	13000	5050	12300
1250	5410	8200	300	300	100	80	80	80	40	4200	6500	15600	5600	13200
1500	5410	8200	300	300	100	80	80	80	50	4200	8700	19500	7000	14100

DIMENSION OF FOUNDATION RECOMMENDED CONCRETE BASE OF TOWER SUPPORT STAND

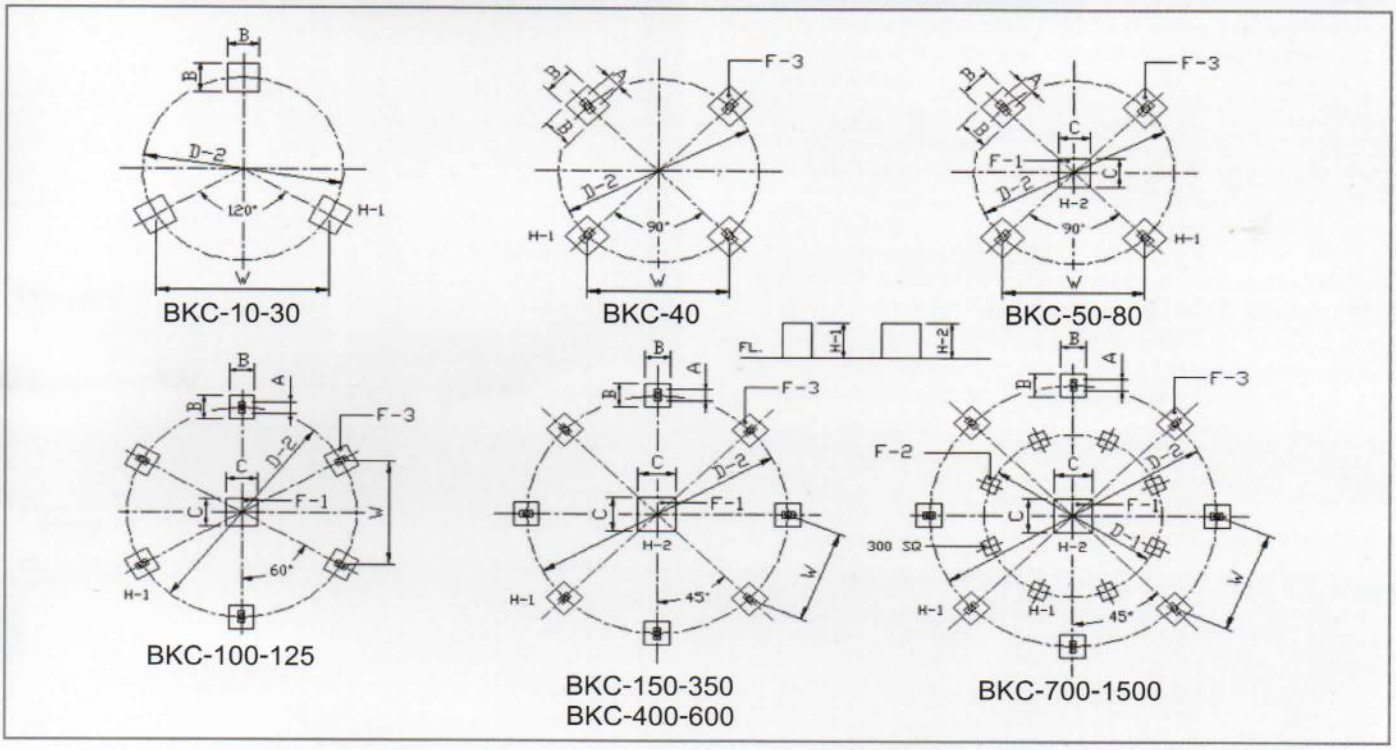

Model BKC	DIMENSION (mm.)								F-1	F-2	F-3	ANCHOR BOLT			PUMP HEAD
	D1	D2	W	A	B	C	H-1	H-2	kg.	kg.	kg.	SIZE mm.	LENGTH mm.	QTY. pcs.	m.
10	-	500	430	-	250	-	150	-	-	-	59	9	120	3	1.3
15	-	800	700	-	250	-	150	-	-	-	87	9	120	3	1.4
20	-	800	700	-	250	-	150	-	-	-	110	9	120	3	1.5
25	-	800	700	-	250	-	150	-	-	-	140	9	120	3	1.6
30	-	1250	1090	100	250	-	200	-	-	-	125	9	120	4	1.8
40	-	1270	900	100	250	-	200	-	-	-	163	9	120	4	1.8
50	-	1520	1070	100	250	250	200	200	255	-	148	9	120	4	1.9
60	-	1520	1070	100	250	250	200	200	274	-	164	9	120	4	1.9
70	-	1660	1170	100	250	250	200	200	346	-	207	9	180	4	2.0
80	-	1660	1170	100	250	250	200	200	353	-	212	9	180	4	2.0
100	-	2400	1200	100	300	600	300	300	510	-	200	9	200	5	3.0
125	-	2400	1200	100	300	600	300	300	585	-	228	9	200	5	3.0
150	-	2620	1003	100	300	600	300	300	750	-	218	9	200	7	3.2
175	-	2620	1003	100	300	600	300	300	870	-	254	9	200	7	3.2
200	-	3060	1171	100	300	600	300	300	1000	-	291	9	200	7	3.5
225	-	3060	1171	100	300	600	300	300	1020	-	298	9	200	7	3.5
250	-	3060	1171	100	300	600	300	300	1050	-	306	9	200	7	4.0
300	-	3900	1500	100	300	700	300	300	1320	-	385	9	200	8	4.0
350	-	3900	1500	100	300	700	300	300	1380	-	402	9	200	8	4.0
400	-	5100	2550	350	500	1000	300	300	2220	-	863	12	200	12	5.0
500	-	5100	2550	350	500	1000	300	300	2550	-	990	12	200	12	5.0
600	-	5400	2700	350	500	1000	300	300	2790	-	1085	12	200	12	5.5
700	3850	6500	2300	350	500	1000	300	300	3230	110	944	12	200	16	5.5
800	4360	7660	2700	350	500	1200	300	300	3300	125	962	12	200	16	6.0
1000	4360	7660	2700	350	500	1200	300	300	3390	125	988	12	200	16	6.0
1250	5050	8100	2900	350	500	1200	300	300	4000	150	1000	12	200	16	6.5
1500	5050	8100	2900	350	500	1200	300	300	4500	200	1000	12	200	16	7.0

F : WEIGHT ON EACH SUPPORT

SOUND PRESSURE LEVEL

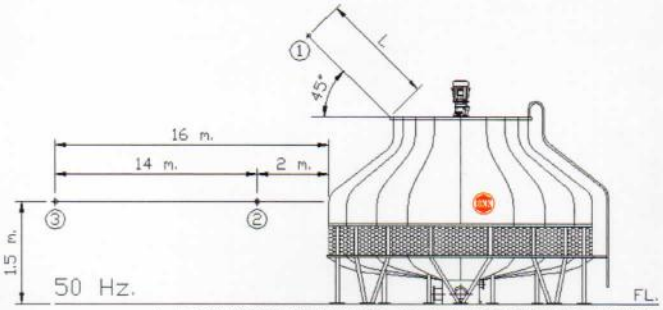

L = DIAMETER OF FAN OR 1.5 M. WHICHEVER IS LARGER

Model BKC	NOISE VALUE dB (A)		
	1	2	3
10	61	56	45
15	66	63	50
20	66	63	50
25	73	67	58
30	73	67	58
40	74	68	59
50	74	68	59
60	74	68	59
70	78	72	63
80	79	73	64
100	76	68	57
125	81	71	61
150	77	71	62

Model BKC	NOISE VALUE dB (A)		
	1	2	3
175	80	75	66
200	79	73	63
225	76	71	62
250	76	71	62
300	77	72	63
350	77	72	63
400	79	74	65
500	79	74	65
600	77	72	63
700	77	72	63
800	78	74	65
1000	80	75	66
1250	80	75	66
1500	85	80	70

WATER QUANTITY LIMIT SELECTION CHART

WATER FLOW = L / MIN.

W.B.	27 °C			28 °C																					29 °C		
Rang °C	15 °C		18°C	5 °C			6 °C		7 °C			8 °C			9 °C		10 °C				11 °C			5 °C		
°C / Model	50 - 35	45 - 30	50 - 32	38 - 33	37 - 32	36 - 31	38 - 32	37 - 31	40 - 33	39 - 32	38 - 31	41 - 33	40 - 32	39 - 31	41 - 32	40 - 31	45 - 35	43 - 33	42 - 32	41 - 31	44 - 33	43 - 32	42 - 31	39 - 34	38 - 33	37 - 32
10	85	42	55	137	112	87	96	76	102	86	68	93	78	62	73	60	105	77	65	76	72	62	62	144	117	91
15	130	66	79	204	170	130	144	116	155	130	104	140	118	95	109	90	160	122	100	82	110	95	78	213	170	137
20	172	95	118	270	225	175	193	153	205	172	137	188	155	123	142	115	210	158	130	128	145	122	124	285	230	181
25	221	113	142	338	283	223	244	195	260	219	175	239	200	159	184	150	270	204	170	149	188	159	145	355	290	231
30	270	130	166	405	340	270	295	236	315	265	213	290	245	195	225	185	330	250	210	170	230	195	165	425	350	280
40	365	190	235	540	450	365	400	326	425	360	295	385	335	275	305	255	440	340	290	240	320	275	230	570	465	375
50	480	250	310	670	570	460	505	420	540	460	380	505	430	355	395	333	570	440	380	320	410	360	305	700	590	480
60	580	300	375	820	700	560	610	510	660	560	465	600	520	430	480	405	690	535	460	380	500	430	370	860	720	590
70	690	370	460	930	810	660	720	605	775	665	555	705	620	518	580	488	820	643	550	465	605	520	450	950	840	680
80	800	440	545	1040	920	760	830	700	890	770	645	810	720	605	680	570	950	750	640	550	710	610	530	1040	960	770
100	970	505	630	1370	1150	935	1020	850	1100	930	770	1020	870	725	810	680	1150	890	760	640	840	750	620	1430	1200	975
125	1200	630	775	1670	1420	1150	1250	1040	1360	1140	950	1240	1070	890	1000	830	1380	1110	940	790	1030	900	760	1740	1480	1200
150	1450	770	945	2000	1700	1380	1520	1260	1640	1390	1160	1500	1290	1070	1210	1010	1720	1340	1150	960	1250	1080	930	2100	1760	1450
175	1700	900	1110	2360	2020	1620	1790	1480	1930	1640	1360	1760	1520	1260	1430	1190	2020	1580	1350	1130	1450	1270	1100	2480	2090	1720
200	1930	1020	1260	2650	2270	1830	2020	1670	2180	1850	1540	2000	1730	1440	1620	1340	2300	1790	1530	1280	1650	1450	1240	2800	2350	1930
225	2060	1060	1320	3000	2500	2030	2200	1800	2350	2000	1670	2180	1860	1540	1745	1450	2480	1900	1630	1370	1750	1550	1300	3150	2600	2130
250	2430	1280	1560	3400	2900	2320	2540	2100	2750	2330	1930	2500	2150	1790	2000	1690	2870	2200	1900	1600	2100	1800	1550	3600	2990	2450
300	2830	1450	1800	4000	3350	2730	2980	2450	3200	2700	2260	2950	2550	2080	2350	1950	3350	2600	2200	1850	2400	2100	1770	4200	3500	2880
350	3430	1810	2220	4700	4000	3250	3550	2950	3850	3250	2720	3550	3000	2540	2820	2360	4050	3150	2700	2250	2950	2550	2200	4900	4100	3400
400	4100	2200	2700	5650	4800	3900	4250	3550	4600	3900	3250	4200	3650	3060	3420	2850	4900	3800	3250	2750	3550	3050	2650	5900	5000	4100
500	5300	2850	3500	6750	5800	4800	5250	4400	5650	4850	4050	5250	4550	4850	4270	3640	6000	4750	4150	3450	4500	3950	3400	7050	6000	5000
600	5950	3100	3870	8100	6900	5650	6150	5100	6600	5700	4700	6150	5250	4400	4950	4170	7000	5450	4700	3950	5100	4450	3800	8550	7200	5850
700	7300	3900	4800	9400	8100	6600	7250	6100	7800	6700	5650	7250	6300	5250	5940	5000	8400	6550	5700	4800	6250	5450	4650	9850	8400	6950
800	7900	4200	5150	10800	9200	7500	8200	6750	8850	7500	6300	8150	7000	5850	6550	5500	9400	7300	6150	5250	6800	5900	5050	11300	9500	7800
1000	10750	5900	7250	13500	11600	9600	10600	8800	11350	9750	8250	10650	9200	7800	8700	7400	12100	9600	8400	7100	9150	8050	6900	14100	12000	10000
1250	13000	7375	9400	16875	14500	11750	13125	10815	14000	12000	10125	13125	11315	9500	10625	9000	14875	11750	10187	8565	11125	9750	8315	17625	15000	12500
1500	17404	8576	11369	19500	19500	17294	19500	18615	15748	19500	17234	14624	18655	16188	13770	17682	15374	13097	19156	16900	14705	12554	16258	14163	12107	19500

INSTRUCTIONS FOR THE INSTALLATION OF BKK COOLING TOWER

1. LOCATION SELECTION

a. Roofs or other open places with free air supply are the best site for cooling tower.

b. Minimum space for cooling tower begin near the enclosure.

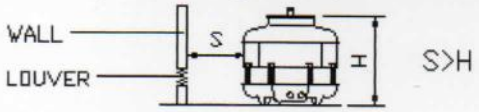

c. In case of multiple installation in line perpendicular installation to air flow direction is recommended.

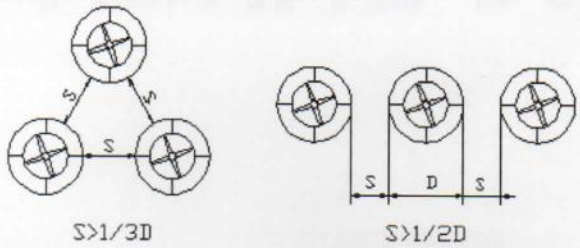

d. Avoid places where corrosive gases exist , such as chimneys.

e. Keep away from hot places such as boiler kitchens, ect.

f. Keep away from smoke and dusty yards.

g. keep away from high voltage line or transformer.

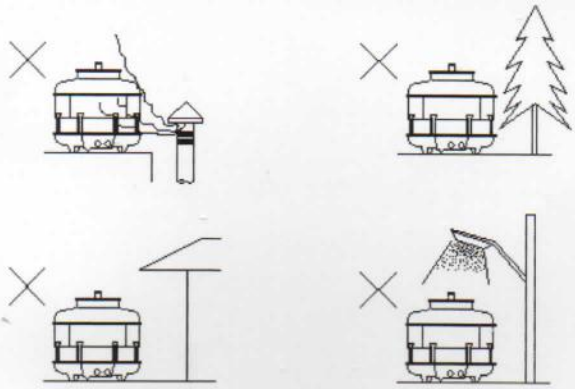

2. POSITION

a. See that the piping can be carried out easily.

b. Be sure to place the tower vertically, as uneven sprinkling will lower the cooling efficiency. See picture below.

c. Tighten the anchor bolts.

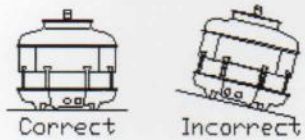

3. PIPING

a. The inlet and outlet pipes must have a downward installation and be lower than the pipe connection of the water sump. See picture below.

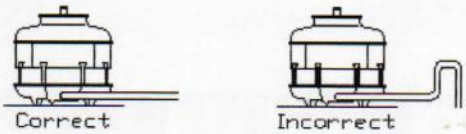

b. The pipe should be the same size as the pipe connection on the water sump. Smaller ones will lower the cooling efficiency and larger ones will be a waste of material.

c. The circulating pump must be located below the water sump under normal operation. See picture below.

d. Twin cooling towers with one pump must also share additional equalizer between each other so that the water in both towers will have the same level. See picture below.

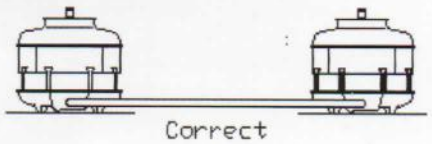

e. High pressure flexible tubes must be used at the joints of circulating outlet and inlet, which size are over 4 inches (100m/m), to prevent vibration transmitted from the piping, and breakage of the water basin caused by improper piping.

4. OTHER

a. After the installation is completed, examination must be made to see that there are no tools or other objects left in the tower.

b. See the neither the piping nor the water basin leaks.

c. When the make-up water pressure is low, install either a water tank higher then the water level or a water make-up pump somewhere in the piping system to obtain the desired water pressure.

USEFUL CONVERSION DATA

1 L/MIN = 0.264 USGPM = 0.22 IMPGPM = 0.06 M^3/H

1 M^3/H = 4.4 USGPM = 3.67 IMPGPM = 16.67 L/MIN

°C	°F
50	122
45	113
44	111.2
43	109.4
42	107.6
41	105.8
40	104
39	102.2
38	100.4
37	98.6
36	96.8
35	95
34	93.2
33	91.4
32	89.6
31	87.8
30	86
29	84.2
28	82.4
27	80.6
26.7	80

REQUESTS WHEN MAKING INQUIRES

1. Inlet & outlet temperature.
2. Atmospheric wet bulb temperature.
3. Water flow rate.
4. Water quality.
5. Electrical voltage and frequency.

B.K.K. COOLING & ENGINEERING CO., LTD.

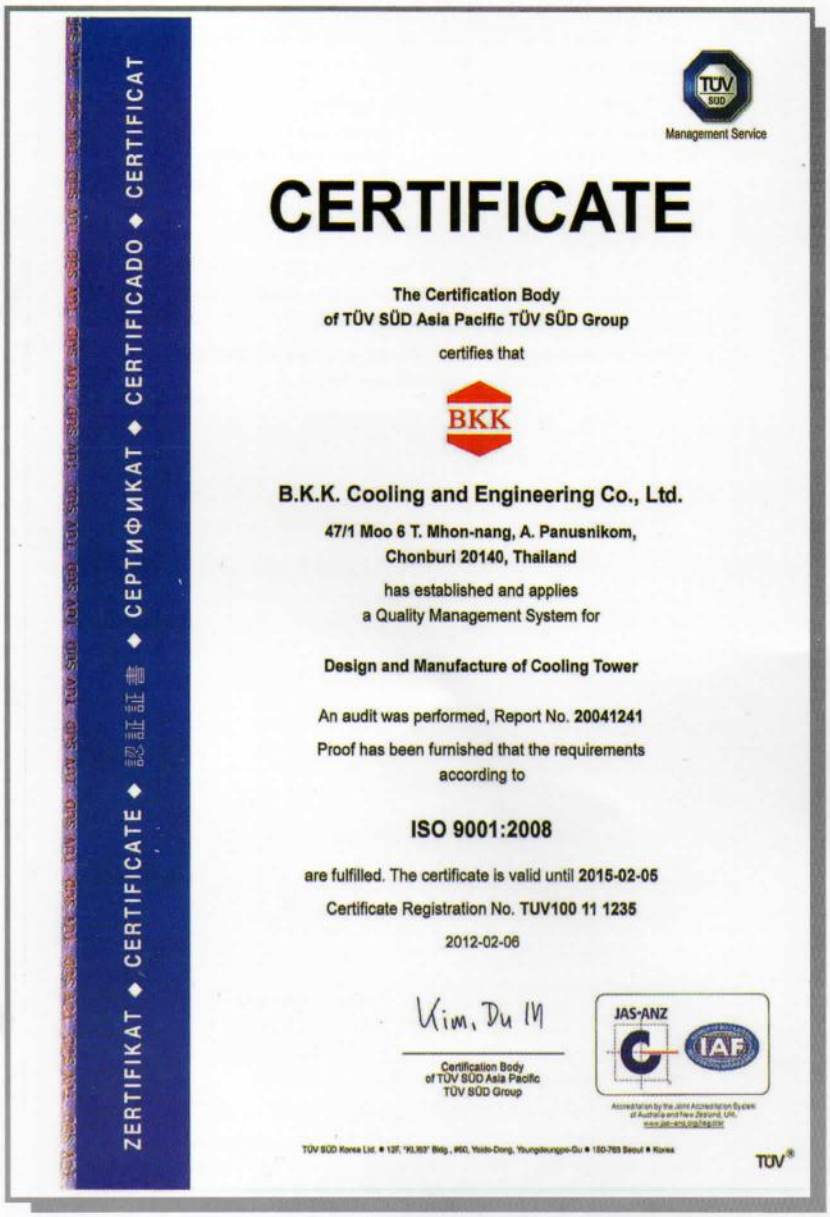

ZERTIFIKAT ◆ CERTIFICATE ◆ 認証証書 ◆ СЕРТИФИКАТ ◆ CERTIFICADO ◆ CERTIFICAT

TÜV SÜD Management Service

CERTIFICATE

The Certification Body
of TÜV SÜD Asia Pacific TÜV SÜD Group

certifies that

BKK

B.K.K. Cooling and Engineering Co., Ltd.

47/1 Moo 6 T. Mhon-nang, A. Panusnikom,
Chonburi 20140, Thailand

has established and applies
a Quality Management System for

Design and Manufacture of Cooling Tower

An audit was performed, Report No. 20041241

Proof has been furnished that the requirements
according to

ISO 9001:2008

are fulfilled. The certificate is valid until 2015-02-05

Certificate Registration No. TUV100 11 1235

2012-02-06

Kim, Du IN

Certification Body
of TÜV SÜD Asia Pacific
TÜV SÜD Group

JAS-ANZ IAF

TÜV SÜD Korea Ltd. ● 12F, "KLIO3" Bldg., #60, Yoido-Dong, Youngdeungpo-Gu ● 150-763 Seoul ● Korea

TÜV

EGAT (Mae Moh Power Plant)
Model : BKC-700 RT = 3 Sets

Red Bull Co., Ltd.
Model : BKC-500 RT = 1 Set

Rubia Industries Co., Ltd.
Model : BCK-400 RT = 1 Set

Double A Paper Mill Co., Ltd.
Model : BKC-1000 RT = 2 Sets

Asia Pet Co., Ltd.
Model : BKC-1000 RT = 2 Sets

Beredero Shaw Middle East Co., Ltd.
Model : BKC-1500 RT = 1 Set

Dynea (Vietnam)
Mobel : BKC-1250 RT = 1 Set

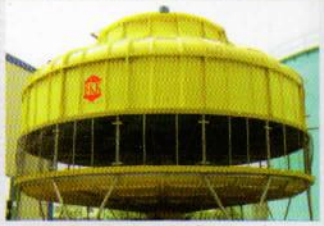

Quang Minh Oil (Vietnam)
Model : BKC-400 RT = 1 Set

B.K.K. COOLING & ENGINEERING CO., LTD. (THAILAND)

:: Head office

5/69 Moo 1 T.Bangkaew A.Bangplee Samutprakarn 10540
Tel. (+66 2) 383 3636-7, 383 3601
Fax. (+66 2) 383 3356, 753 6966
E-mail : support@bkkcooling.co.th

:: Factory

47/1 Moo 6 T.Mhon-Nang A.Panusnikom Chonburi 20140
Tel. (+66 38) 293 542-3, Fax. (+66 38) 293 379

B.K.K. VINA COOLING TOWER CO., LTD. (VIETNAM)

:: Vietnam Branch

43/8 Cong Hoa, Ward 4, Tan Binh District, HCMC, Vietnam
Tel. (+84 8) 6296 7126, 6296 7127 Fax. (+84 8) 6296 7029
E-mail : sales_vn@bkkcooling.co.th

:: Factory

11/1D Tam Dong hamlet Thoi Thom Thon village,
Hoc Mon district HCMC, Vietnam
Tel. (84 8) 3710 6609, 3710 6599